Radar Human Activity Detection

Jean Jacques Chirat

Preston Bowyer

William Jachimiak

Aiden George

CONCEPT OF OPERATIONS

CONCEPT OF OPERATIONS

FOR

Human Activity Radar Detector

TEAM 4

APPROVED BY:

_____

Project Leader Date

_____

Prof. Kalafatis Date

_____

T/A Date

Change Record

Rev.	Date	Originator	Approvals	Description
-	9/17/2025	Radar Human Activity Detector		Draft Release

Table of Contents

Figure 1: Human Radar Detector Block Diagram 6
1. Executive Summary 7
2. Introduction 7
2.1. 7
2.2. Background 7
2.3. Overview 8
2.4. Referenced Documents and Standards 9
3. Operating Concept 10
3.1. Scope 10
3.2. Operational Description and Constraints 10
3.3. System Description 10
3.4. Modes of Operations 11
3.5. Users 11
3.6. Support 11
4. Scenario(s) 12
4.1. Assisted Living Fall Detection 12
4.2. Gym Fall Detection 12
4.3. Child/Animal in Car Detection 12
5. Analysis 12
5.1. Summary of Proposed Improvements 12
5.2. Disadvantages and Limitations 13
5.3. Alternatives 13
5.4. Impact 13

List of Tables

No table of figures entries found.

List of Figures

Figure 1: Human Radar Detector Block Diagram

Executive Summary

Tracking the activities of an individual in an assisted-living home is essential in ensuring their continued physical well-being. However, doing so often requires means that unintentionally violate the privacy rights of these individuals, such as the installation of equipment that collects visual, audio, and other forms of data. These are usually installed in private areas in which the individual cannot receive assistance in a timely manner. As such, it is critical that a product be developed that both reliably detects & alerts the proper personnel for emergency assistance and does not intrude on individual privacy. This product is designed to collect data using radar signal reflections to assess the received signal. Using a machine learning model trained on collected data sets of falling individuals, the fall signal will be continuously classified over a period of ten to twenty seconds. If the pattern persists, an alert will be transmitted to a mobile application interface for assisted-living personnel so that further emergency action can be taken. The scope of this project is to provide a prototype that increases the efficiency of response times by assisted-care workers at a minimal level of personal privacy violation.

Introduction

This document introduces the human activity radar detector, which monitors private areas in assisted-living homes for signs of fall injury in order to alert on-site personnel for further emergency care. The module will reduce the frequency and time between injury and the arrival of assistance and will ensure that the privacy of vulnerable individuals in these spaces is not violated.

Background

Injury from falling is common among the elderly in assisted-living homes, and such injuries can cause further physical ailments if the fall goes unnoticed. According to a collection of 18 studies on elderly individuals living in nursing homes, the incidence of falls is 43% [1]. This means that a significant minority of the elderly in these facilities have experienced some

form of injury from falling. Therefore, it is critical to develop a product that minimizes the potential physical impairments that result from these injuries.

The protection of individual privacy is another key aim of this project. In recent times, the usage of camera systems for home security has led to privacy failures and breaches of trust on the part of service providers. For example, in 2023, the home security company Ring did not invest in adequate privacy & security provisions of customer data, which led to the misuse of the data by employees [2]. This presents a serious risk for users of home cameras, especially for those in assisted care who are more vulnerable, and a need for an alternative that can accomplish the same tasks without violating individual privacy. This project aims to develop a system that utilizes minimally invasive data collection, which will ensure the security of users' privacy.

Overview

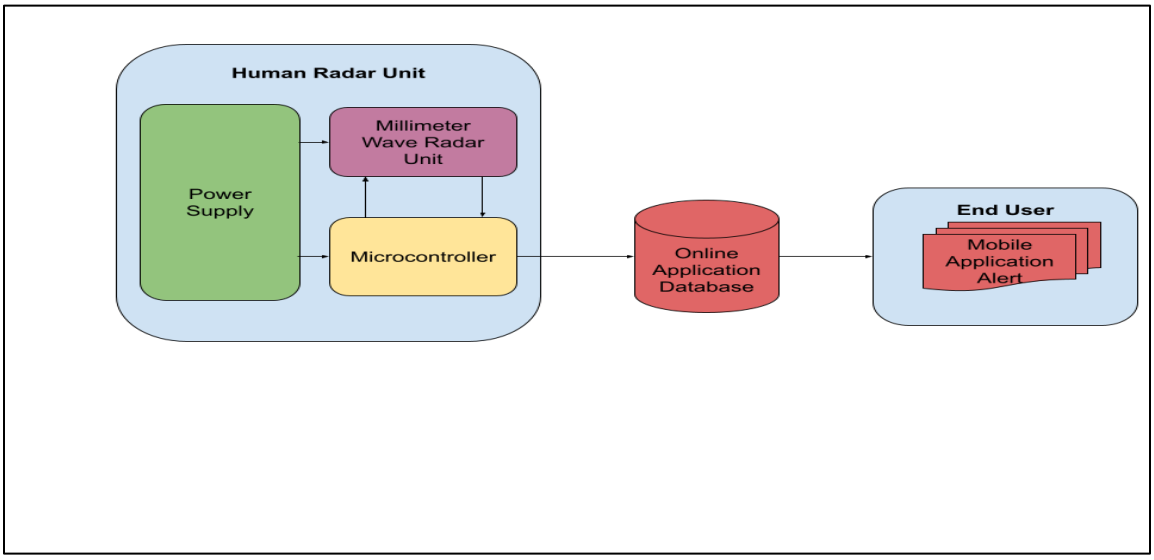

Figure 1: Human Activity Radar Detector Block Diagram

This system will be used to monitor a set location for people falling. This will be done by three primary components within the Human Radar Unit: the power supply, the microcontroller, and a mobile app interface to display the location of the received signal. The human activity radar detector will be outfitted with a radar module, which includes transmit and receive antennas, to detect objects at a range of eight to ten meters. This radar module will continually transmit & receive signals, which, using an onboard signal processing module, will send digital data to a microcontroller. The microcontroller will be

programmed with a machine learning algorithm that will be trained on data sets of fall injury radar patterns. By classifying the received signal, the module will alert the on-site personnel through a mobile app interface so that they can provide the necessary care.

Referenced Documents and Standards

[1] Shao L, Shi Y, Xie XY, Wang Z, Wang ZA, Zhang JE. Incidence and Risk Factors of Falls Among Older People in Nursing Homes: Systematic Review and Meta-Analysis. J Am Med Dir Assoc. 2023 Nov;24(11):1708-1717. doi: 10.1016/j.jamda.2023.06.002. Epub 2023 Jul 8. PMID: 37433427.

[2] Staff, BCP, et al. "Ring's Privacy Failures Led to Spying and Harassment through Home Security Cameras." *Consumer Advice*, 30 Oct. 2023, consumer.ftc.gov/consumer-alerts/2023/05/rings-privacy-failures-led-spying-harassment-through-home-security-cameras.

Operating Concept

Scope

The Human Activity Radar Detector (HARD) will be used in residential and assisted living settings to detect human falls within a short distance (below 10m) using a high-frequency radar sensor. The radar sensor mounted on the wall will constantly be sending data to a control unit, where a microcontroller running a classification machine learning model will determine if there has been a fall injury. Once a fall injury has been detected, the microcontroller will communicate with an app via Wi-Fi to send out an alert to caretakers/family and emergency services.

Operational Description and Constraints

The Human Activity Radar Detector will be installed in spaces where assisted care is at the lowest level, such as bathrooms, bedrooms, etc. The module will transmit & receive signal reflections that will be processed to determine the occurrence of a falling injury, verify the certainty that the injury has in fact occurred, and alert the nearby assisted-care worker through an app interface. Below are listed the constraints of this design:

- The app interface must be able to identify the designated room location of a signal transmission in case of emergency.
- The module must be able to operate over the Wi-Fi network or otherwise be able to access an internet connection.
- The machine learning algorithm for detecting signal patterns will be trained on a predetermined set of data, which cannot be modified in the future.
- The system must be able to operate using a 9V battery that will be regulated by on-board circuitry.
- The system must continually classify affirmative signals for a period of 10-20 seconds before alerting personnel to prevent false alarms from triggering.

System Description

The radar detection system will be defined by three central parts: the radar detector, the microcontroller programmed with a machine learning algorithm, and the mobile application user interface. Power will be provided by a peripheral power management system. The radar detector will deliver digitally processed FMCW data to the microcontroller, which will classify the signal using a machine learning algorithm. The algorithm will decide whether the signal resembles a fall injury. If so, a signal will be transmitted over Wi-Fi to the user interface to indicate that a fall has occurred.

Modes of Operations

The system will have one primary mode of operation, in which detected falls are tracked with an alert sent to a mobile device. This will consist of three primary actions performed by the system: detection, validation, and finally alerting the user.

Detection

The system will emit & process signals continuously to identify whether an injury pattern has occurred.

Validation

The system will continue to process signals as before; however, the system will also maintain a counter that will verify that an injured person has remained on the floor after the fall.

Alert

The system will send an alert to the user interface to inform assisted-care personnel in the area that an injury has occurred.

Users

This system will primarily be used by individuals who are at risk of serious injury from falls and their immediate family or caretakers. The level of training required to use this system will be very low, with the only requirements being the installation of a mobile app and the mounting of the system on a wall. This system will benefit both at-risk individuals and their families, providing both of those groups the peace of mind that if something bad were to happen, they would be informed of it in a timely manner along with the appropriate medical personnel.

Support

This system will include a user manual in the box detailing how to install the physical device and the phone app. If users are having issues with the app, they will be able to either call a support number with their issue or send an email relaying the issue to the manufacturer.

Scenario(s)

Assisted Living Fall Detection

The Human Activity Radar Detector's primary use is for fall detection in assisted living environments. Residents in assisted living are at high risk of falls, which, if left unattended, can result in compounded side effects. The proposed radar system would provide continuous, non-invasive monitoring of desired areas in residential care homes (possibly in bedrooms/bathrooms where staff are less present). When falls are detected, the system will alert the staff via a phone/web app, ensuring a rapid response.

Gym Fall Detection

Another possible application of this system is to work within public gyms. Given the irregular hours that gyms can be open, having personnel on site constantly monitoring issues could be difficult. Areas or exercises where fall detection could be applicable include the squat rack, deadlift, power clean, and other such exercises with a full range of motion. Having an automated alert system could help employees watch for possible life-threatening issues while reducing mental workload

Child/Animal in Car Detection

Another application of radar detection could be detecting children or animals inside a locked car. There have been numerous cases globally of child or animal deaths due to being stuck in locked cars on a hot day. This issue is prevalent enough that, in the coming years, the EU will require cars to have radar detection systems inside for this exact purpose. There is no practical way for any police body to monitor all cars to protect against this issue. Having a system to check for this can ensure more child and animal lives are saved each year.

Analysis

Summary of Proposed Improvements

- The system will operate off battery power for its main configuration; this will allow placement in locations where a power source is not available.
- Ease of installation: Given that the system's logic is based on a machine learning model, user input will be minimal during both installation and operation.

- Cybersecurity integration: In order to prevent wireless communication that may retrieve user data, integrating basic cybersecurity into the system would greatly advance the stated purpose of protecting users' privacy.

Disadvantages and Limitations

- Need to ensure that batteries are adequately charged.
- Low computing capacity within the microcontroller limits ML implementation.
- Limited directionality compared to a camera-operated system.
- High cost for FMCW radar sensors.

Alternatives

Alternatives to the millimeter wave radar detection solution include, but are not limited to:

- Constant monitoring by attending caretakers
- Off-the-shelf camera monitoring systems
- The same unit, but with a wired power solution
- Life-Alert style button
- Smart watch fall detection alerts

Impact

This design is largely focused on reducing the impact of data collection on personal privacy; however, there remains a minimal level of data that must be collected from the operating environment in order for the design to function. This does not pose any significant risk to the user's personal information or privacy. In addition, the programmed algorithm does not feature the ability to receive updates, modifications, or any devices that record data that are not explicitly stated in this document, making the user's data secure from malpractice.

Human Activity Radar Detector

William Jachimiak

Jean Jacques Chirat

Preston Bowyer

Aiden George

FUNCTIONAL SYSTEM REQUIREMENTS

REVISION --

4 October 2025

FUNCTIONAL SYSTEM REQUIREMENTS

FOR

Human Activity Radar Detector

PREPARED BY:

_____

Author Date

APPROVED BY:

_____

Project Leader Date

_____

John Lusher, P.E. Date

_____

T/A Date

Change Record

Rev.	Date	Originator	Approvals	Description
-	10/4/2025	Human Activity Radar Detector Team		Draft Release

Table of Contents

Table of Contents **17**
List of Tables **18**
List of Figures **19**
1. Introduction **20**
1.1. Purpose and Scope 20
1.2. Responsibility and Change Authority 20
2. Applicable and Reference Documents **21**
2.1. Applicable Documents 21
2.2. Reference Documents 21
2.3. Order of Precedence 22
3. Requirements **22**
3.1. System Definition 22
3.2. Characteristics 23
3.2.1. Functional / Performance Requirements 23
3.2.2. Physical Characteristics 24
3.2.3. Electrical Characteristics 25
3.2.4. Environmental Requirements 26
3.2.5. Failure Propagation 26
4. Support Requirements **27**
Appendix A: Acronyms and Abbreviations **27**

List of Tables

List of Figures

Figure 1. Block Diagram of System 22

Introduction

Purpose and Scope

This document will prescribe the system requirements of this design in real-world operation. The purpose of the Human Activity Radar Detector (HARD) is to improve the efficiency of response times & privacy protection in assisted-care homes in the event of a fall injury. The system will improve response times by actively identifying a fall injury event using machine learning. By using a trained machine learning model, the system will classify fall injuries at a highly reliable rate. The system will provide the user with information about the location of detection in the event of injury. The system will collect the minimal amount of data necessary to ensure efficient detection. The system should ensure up to ten hours of typical operation before a battery recharge is necessary.

Responsibility and Change Authority

The functional requirements of the system should only be modified with the consensus of the team members. The details of implementation & methodology of subsystems may be modified upon the agreement of the team members. The team leader, William Jachimiak, will be responsible for making sure that the functional requirements of the system are met. The people responsible for each subsystem are listed below:

- William Jachimiak, PCB design and development
- Jean Jacques Chirat, Machine learning algorithm & training
- Aiden George, Power system & distribution
- Preston Bowyer, User-end application interface

Applicable and Reference Documents

Applicable Documents

The following documents, of the exact issue and revision shown, form a part of this specification to the extent specified herein:

Document Number	Revision/Release Date	Document Title
47-CFR-95-M	9/20/2017	Permitting Radar Services in the 76-81 GHz Band
45-CFR-160,164	12/28/2000	Standards for Privacy of Individually Identifiable Health Information
ISO/IEC 29100:2024	02/2024	Security Techniques - Privacy Framework
802.11 (b/g/n)	03/2012	Wireless LAN (WLAN) Medium Access Control (MAC) and Physical Layer (PHY) Specifications

Reference Documents

The following documents are reference documents utilized in the development of this specification. These documents do not form a part of this specification and are not controlled by their reference herein.

Document Number	Revision/Release Date	Document Title
PC95.1-2019	10/4/2019	Standard for Safety Levels with Respect to Human Exposure to radio frequency Electromagnetic Fields

Order of Precedence

In the event of a conflict between the text of this specification and an applicable document cited herein, the text of this specification takes precedence without any exceptions.

All specifications, standards, exhibits, drawings or other documents that are invoked as "applicable" in this specification are incorporated as cited. All documents that are referred to within an applicable report are considered to be for guidance and information only, except ICDs that have their relevant documents considered to be incorporated as cited.

Requirements

This section defines the minimum requirements that the development item(s) must meet. The requirements and constraints that apply to performance, design, interoperability, reliability, etc., of the system, are covered.

System Definition

The Human Activity Radar Detector is a fall detection system that will be able to detect a fall injury and send a notification via a web app to caretakers and family. It will be mounted to the wall in residential areas such as bedrooms and bathrooms. The four subsystems for the Human Activity Radar Detector are the power supply, microcontroller and PCB, the machine learning algorithm, and the web application.

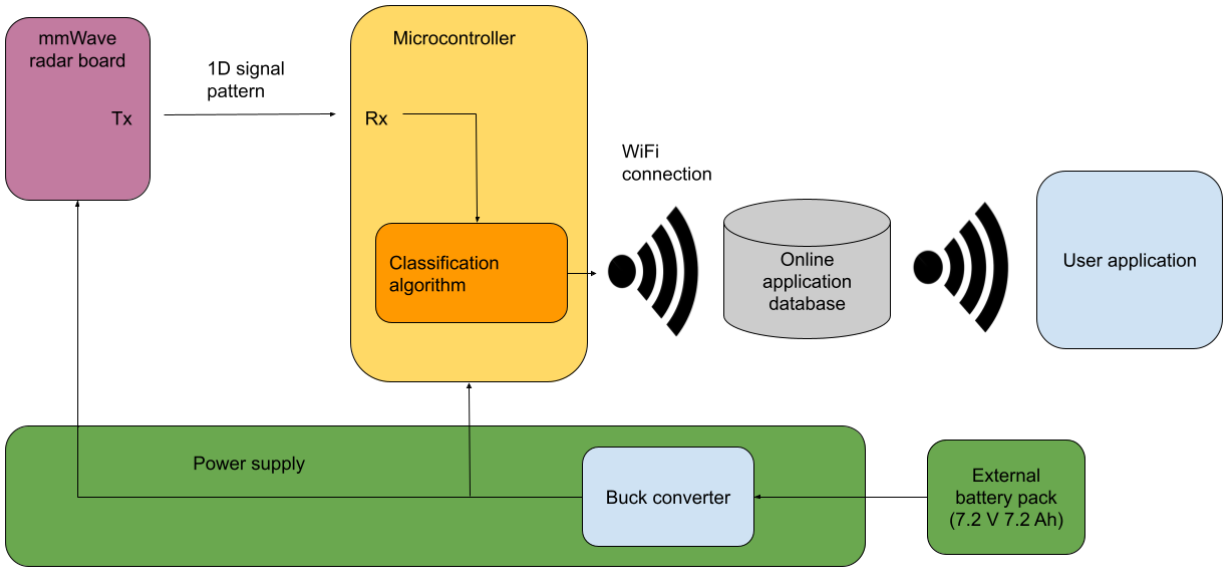

Figure **1**. *Block Diagram of System*

The mmWave radar will transmit a signal comprised of the height component of a moving person and a range-doppler velocity component. The board will transmit this data to the ESP32 microcontroller, where the data will be processed through a simple neural network, with two criteria: a decrease in vertical coordinates and a downward velocity above an observed threshold. If it is decided that a fall injury occurred, the microcontroller will communicate with an online database, where the status of injury will be updated and the location of the particular module will be displayed for personnel to assist the injured.

Characteristics

Functional / Performance Requirements

Responsive in under 10 seconds

The system will be able to perform detection and alert the user within ten seconds of the occurrence of the fall injury event. The algorithm execution time, in addition to network latency, should remain under this limit in the vast majority of cases.

Low False Positive Rate

The system will have a low false positive rate of at most five to ten percent.

Rationale: A low false positive rate such as ~8% will prevent frequent disruption of other assisted-care responsibilities that on-site personnel may have.

Extremely low false negative rate

The system will have a very low to negligent false negative rate and must be below 5% by requirement..

> *Rationale: The costs & liabilities of a false negative are far more consequential than a false positive. Therefore, it is imperative that false negatives are made as infrequent as possible for a reliable usage of the system.*

Can run on battery for 10 hours

The Human Activity Radar Detector should be able to run on battery power and provide up to ten hours of active operation.

> *Rationale: The Human Activity Radar Detector will be entirely powered by battery and as a system that is designed to be able to detect at any time, it should be able to run for an extended period of time that is at least 10 hours.*

Physical Characteristics

Installation

The installation of the radar detection module shall be specified in the user manual provided. The module will be pre-programmed with the trained algorithm.

Mass

The mass of the human activity radar detector shall be less than or equal to 4 kilograms.

> *Rationale: The system should be able to be hung on drywall using drywall screws with anchors that at minimum should be able to hold roughly 6 kg. Our limit for mass is less than this amount to ensure that there is minimal risk of damaging the equipment.*

Volume Envelope

The volume envelope of the Human Activity Radar Detector shall be less than or equal to 7 inches in height, 6 inches in width, and 3 inches in length.

> *Rationale: This is a requirement specified by our customer due to constraints of their system in which the Search and Rescue System is integrating.*

Mounting

The mounting information for the Search and Rescue System shall be captured in the Human Activity Radar Detector ICD.

Electrical Characteristics

Inputs

The presence or absence of any combination of the input signals in accordance with ICD specifications applied in any sequence shall not damage the Human Activity Radar Detector, reduce its life expectancy, or cause any malfunction, either when the unit is powered or when it is not.

> *Rationale: By design, should limit the chance of damage or malfunction by user/technician error.*

Power Consumption

The maximum peak power of the system shall not exceed 15W.

> *Rationale: This is to ensure that the module is not damaged by excessive voltage.*

Input Voltage Level

The input voltage of the system will be 7.2V.

> *Rationale: Our radar board and microcontroller are designed to operate using 5V and 3.3V input, respectively. Each voltage level will be obtained using a stepdown buck converter before being supplied to the component.*

Outputs

Data Output

The Human Activity Radar Detector will provide a mobile application for users to view detection alerts.

> *Rationale: The detection information passes directly to the caretaker's system.*

Diagnostic Output

The Human Activity Radar Detector shall include identification for each radar module as well as the location of the fall injury.

> *Rationale: Eliminates the necessity of searching all module locations and pinpoints the exact location to facilitate a speedy response to the injured person.*

Connectors

The Human Activity Radar Detector shall follow the American National Standard for Electrical Connectors ANSI C119.6-2011.

Rationale: Conform to connector standard.

Wiring

The Human Activity Radar Detector shall follow the guidelines set forth in the National Electric Code regarding electrical wiring.

Rationale: Conform to wiring standard.

Environmental Requirements

The Human Activity Radar Detector will operate within the minimal requirements for the environment specified in the section below.

Rationale: The HARD system will operate indoors where exposure to the elements will be minimal.

Thermal

The Human Activity Radar Detector will be able to operate in temperatures ranging from 0°C to 50°C. The module is expected to be stored in a room temperature environment, away from long-term exposure to outside conditions.

Rationale: The HARD system PCB may be damaged, or its operation hindered by exposure to abnormal temperature.

Humidity

The Human Activity Radar Detector will be able to operate in humidity ranging from 0% to 100%. The module is expected to be stored in a dry environment.

Rationale: The HARD system PCB may oxidize in a humid environment, which may seriously damage performance expectations.

Failure Propagation

The Human Activity Radar Detector shall not allow propagation of faults beyond the Human Activity Radar Detector user interface.

Failure Detection, Isolation, and Recovery (FDIR)

Built In Test (BIT)

The Human Activity Radar Detector shall be able to evaluate detection patterns and determine whether there is a failure.

BIT False Alarms

The Human Activity Radar Detector shall have a false alarm rate of less than 5 percent.

> *Rationale: This is a useful requirement for the purpose of limiting time spent by personnel reacting to false alarms.*

Support Requirements

The Human Activity Radar Detector requires a Wi-Fi connection and a functioning cloud database to operate, as well as a rechargeable battery with sufficient voltage level. The MCU will operate on the Wi-Fi network to transmit detection status to the cloud database.

Appendix A: Acronyms and Abbreviations

Below is a list of common acronyms and abbreviations, update based upon your project….

BIT	Built-In Test
FOV	Field of View
FSR	Functional System Requirements
GUI	Graphical User Interface
MCU	Microcontroller Unit
Hz	Hertz
ICD	Interface Control Document
kHz	Kilohertz (1,000 Hz)
mA	Milliamp
Ah	Ampere-hour
GHz	Gigahertz (1,000,000,000 Hz)
W	Watt
PCB	Printed Circuit Board
TBD	To Be Determined
UART	Universal Asynchronous Receiver-Transmitter

Human Activity Radar Detector

William Jachimiak

Jean Jacques Chirat

Preston Bowyer

Aiden George

INTERFACE CONTROL DOCUMENT

REVISION --

4 October 2025

INTERFACE CONTROL DOCUMENT

FOR

Human Activity Radar Detector

PREPARED BY:

_____

Author Date

APPROVED BY:

_____

Project Leader Date

_____

John Lusher II, P.E. Date

_____

T/A Date

Change Record

Rev.	Date	Originator	Approvals	Description
-	10/4/2025	Human Activity Radar Detector Team		Draft Release

Table of Contents

Table of Contents **33**
List of Tables **34**
List of Figures **35**
1. Overview **36**
2. References and Definitions **36**
2.1. References 36
2.2. Definitions 36
3. Physical Interface **36**
3.1. Weight 36
3.2. Dimensions 36
3.2.1. Dimension of ML (MCU) subsystem 37
3.2.2. Dimension of Radar Board subsystem 37
3.2.3. Dimension of Power Supply subsystem 37
3.3. Mounting Locations 37
4. Thermal Interface **38**
5. Electrical Interface **38**
5.1. Primary Input Power 38
5.2. Voltage and Current Levels 38
5.3. Signal Interfaces 39
5.4. User Control Interface 39
6. Communications / Device Interface Protocols **39**
6.1. Wireless Communications (WiFi) 39
6.2. Device Peripheral Interface 39

List of Tables

Table 1*: System Component Weights* **36**
Table 2*: MCU Dimensions* **37**
Table 3*: Radar Board Dimensions* **37**
Table 4*: Power Supply Dimensions* **37**
Table 5: *Device Power Consumption* **38**

List of Figures

Figure 1: Power Distribution System..... 38

Overview

The Interface Control Document (ICD) for the Human Activity Radar Detector will provide more information on how the subsystems in the concept of operations and the functional system requirements (FSR) will be produced. It will also include more information on how each subsystem will interact with the others.

References and Definitions

References

Refer to 'Applicable and Reference Documents' section of the Functional System Requirements document

Definitions

PCB	Printed Circuit Board
mA	Milliamp
mW	Milliwatt
GHz	Gigahertz (1,000,000,000 Hz)
TBD	To Be Determined
UART	Universal Asynchronous Receiver-Transmitter
ML	Machine learning

Physical Interface

Weight

Component	Weight (kg)
ESP32-S3-WROOM-1-N8R8	0.002
External Rechargeable Battery (each)	0.05
Radome	TBD
Radar Chip Board	0.119

Table 1: *System Component Weights*

Dimensions

	Length (mm)	Width (mm)	Height (mm)
ESP32-S3-WROOM-1-N8R8	25.5	18	3.25

Table 2*: MCU Dimensions*

Dimension of ML (MCU) subsystem

	Length (mm)	Width (mm)	Height (mm)
TI IWR1642	76.2	61.0	15.2

Table 3*: Radar Board Dimensions*

Dimension of Radar Board subsystem

	Length (mm)	Width (mm)	Height (mm)
Rechargeable Battery Pack (each)	65.25	18.8	TBD
Buck Converter System	TBD	TBD	TBD

Table 4*: Power Supply Dimensions*

Dimension of Power Supply subsystem

Mounting Locations

The device may be mounted in any location on a wall that is not exposed to electrical hazards, such as water. For placement in areas of operation with unavoidable contact with water, such as a bathroom, the device should be at a high altitude to prevent component damage.

Thermal Interface

Our device is not expected to need any form of specialized cooling system. The main heat-generating components will be the microcontroller, the radar chip module, and the external battery pack. All three components are expected to be adequately managed by air-cooling.

Electrical Interface

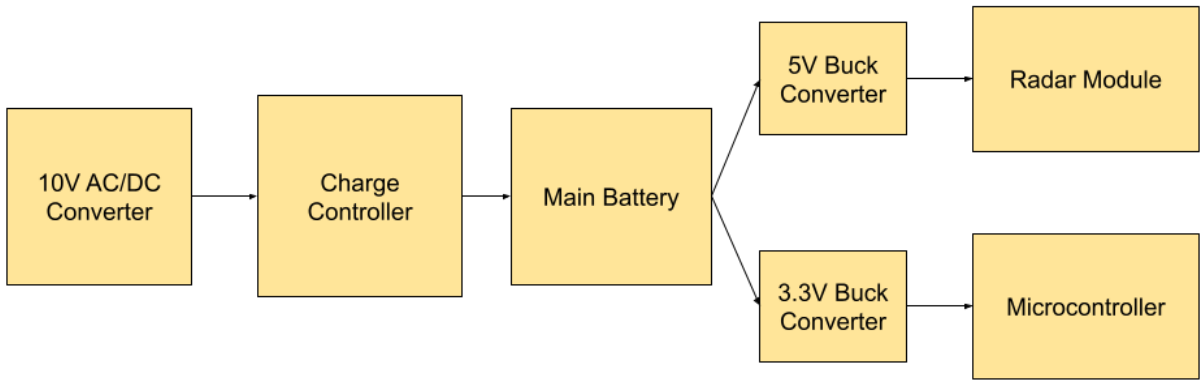

***Figure** 2: Power Distribution System*

Primary Input Power

The primary power source for the system will be an internal rechargeable lithium-ion battery pack with a total voltage of 7.2V with a 7200mAh capacity. This battery will be charged using an AC/DC 10V 100W adapter which can be plugged into the device. As both the radar module and microcontroller have high power requirements, the device is expected to be able to run off battery power for at least 10 hours before needing to charge.

Voltage and Current Levels

Component	Voltage	Current (Max)	Power (Max)
Charge Controller (Charging Output)	7.2V	10A	72W
Radar Unit	5V	5A	25W
ESP32 MCU	3.3V	2A	6.6W

Table 5: Device Power Consumption

Signal Interfaces

Our system does not provide the user with a way to interact with the signals collected by the module to ensure the simplicity of design.

User Control Interface

The user will be able to interact with the system through the mobile/web application interface, where the individual modules will be instantiated and the modules can inform the user in the case of a detection event.

Communications / Device Interface Protocols

Wireless Communications (WiFi)

The MCU includes a built-in Wi-Fi system with integrated 2.4 GHz, 802.11 b/g/n Wi-Fi. Through this, the output determined by the ML model will be published to a cloud service that the application is subscribed to.

Device Peripheral Interface

The TI IWR1642 radar chip communicates with and sends data to the ESP32-S3 through a serial port using UART. The UART baud rate will be 921,600 bps and will follow the TI mmWave CLI and TLV data format.

William Jachimiak

Jean Jacques Chirat

Preston Bowyer

Aiden George

VALIDATION PLAN

REVISION --

4 October 2025

Schedule

Date	Task	Owner	Status

9/9	Learn & understand the problem	All	
9/16	Research and planning	All	
9/23	Midterm presentation	All	
9/30	Order parts	All	
10/7	Receive parts	All	
10/7	App UI started	Preston	
10/14	Mock Server for dummy signals completed	Preston	
10/21	Complete PCB design	William	
10/21	Database for logging/storing begun	Preston	
10/21	Complete training data	Jean Jacques	
10/28	Interface MCU to radar	William	
10/28	Begin risk analysis work	Preston	
11/4	Apply power supply to PCB	Aiden	
11/4	Validate App-Cloud communication/connection	Preston	
11/11	Apply MCU on PCB	All	
11/18	Validate Radar to MCU to WiFi/Cloud to App data flow	William	
11/25	Final Presentation	All	
12/2	Demo	All	

Validation Plan

Task	Specification	Owner	Result

Peak Power	10 W	Aiden	
Radar Detect Distance (Max)	8 meters	All	
Fall-to-Alert Time (Min)	≤ 10 seconds	All	
Detection False Positive Rate	≤ 8%	JJ/William	
Detection False Negative Rate	≤ 5%	JJ/William	